MAGTECH
The Power To Drive Innovations

Project Name:	
Type:	

LD012L-VUxxxxx-02

12W AC-DC Constant Voltage
LED Driver

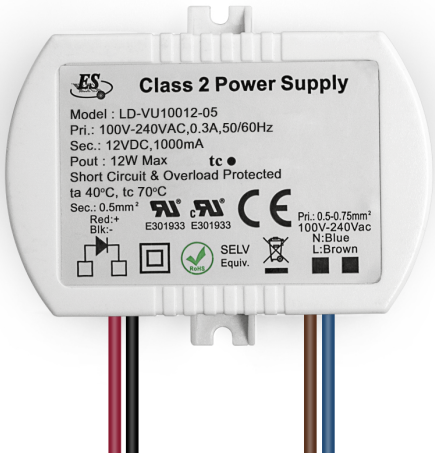

PRODUCT FEATURE

- Universal AC input / 100-240VAC
- Constant Voltage design (C.V mode)
- Class 2 Power Supply Unit
- Fully isolated plastic case
- Protections: OCP/ SCP/ OTP
- 2-years warranty

CE IP67 low flicker

WARRANTY

- See Limited Warranty Policy for more additional information

MODEL NO	LD012L-VU10012-05	LD012L-VU05024-02
OUTPUT VOLTAGE	12V	24V
RATED CURRENT	0 – 1A	0 – 0.5A
TOLERANCE (V)	±5%	±5%
EFFICIENCY	81%	83%
FLICKER FREE	√	√
WATTS	12W	12W

MECHANICAL SPECIFICATION

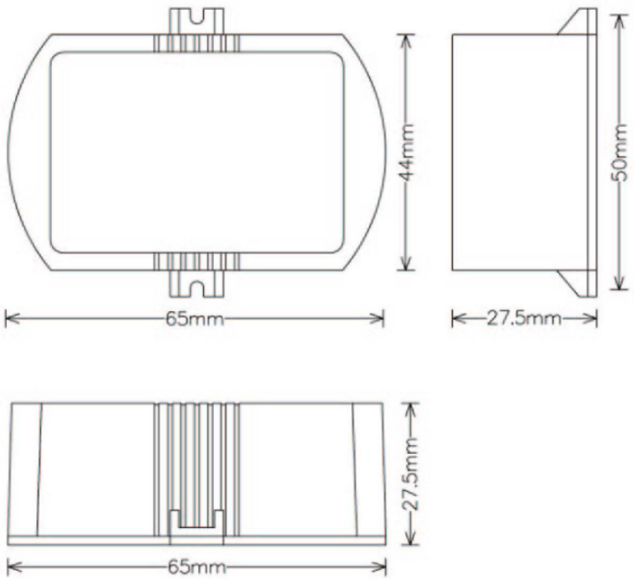

WIRING DIAGRAM

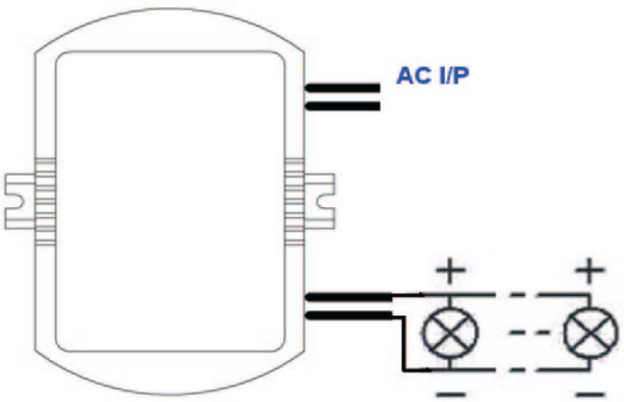

MAGTECH INDUSTRIES CORP. reserves the right to change specifications, drawings, dimensions without prior notice.
5625 Arville St. Suite A Las Vegas NV, 89129 | Tel 702-364-9998 | csupport@magtechind.com | www.magtechind.com