07-0225 A

REVISIONS		
REV	DESCRIPTION	DATE
A0	RELEASE	07/13/2020

QM40
Tc=90°C

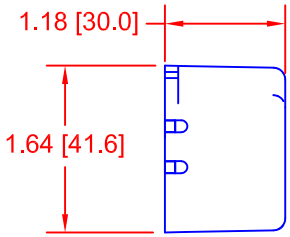

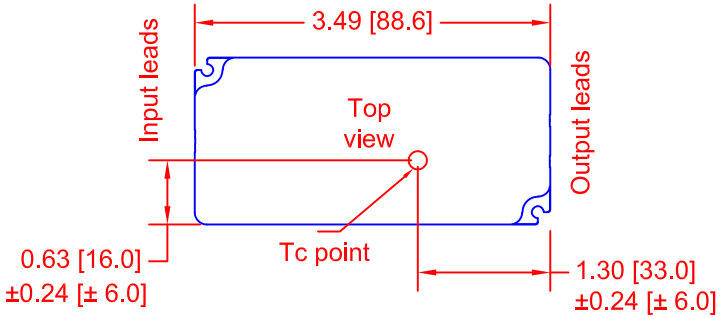

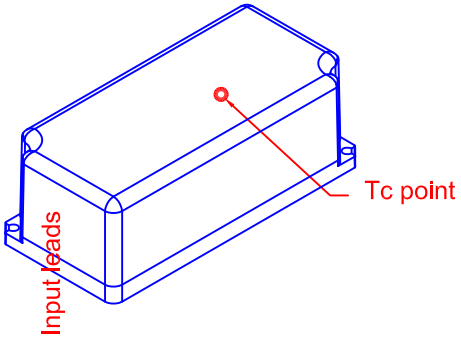

QM50 Tc=90°C

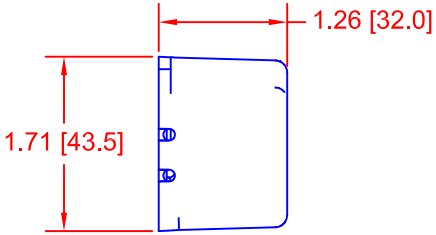

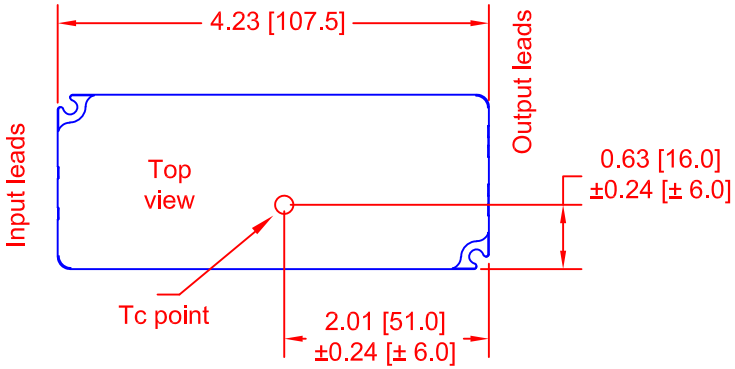

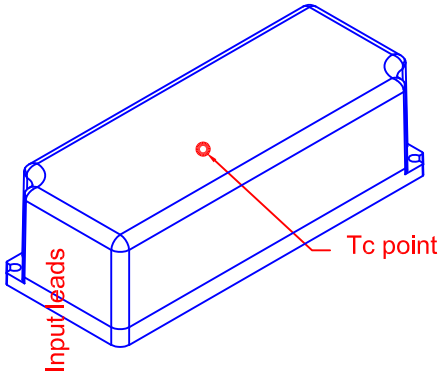

MANUFACTURED BY:

THIS ITEM IS THE PROPERTY OF MAGTECH INDUSTRIES AND CONTAINS PROPRIETARY CONFIDENTIAL AND TRADE SECRET INFORMATION. THE INFORMATION CONTAINED HEREIN MUST NOT BE USED, DISCLOSED OR REPRODUCED IN WHOLE OR IN PART WITHOUT PRIOR WRITTEN CONSENT FROM MAGTECH IND.

UNLESS OTHERWISE SPECIFIED
DIMENSIONS IN INCHES [MM]
TOLERANCES:
.X DECIMALS± .05 [1.3]
.XX DECIMALS± .02 [0.5]
.XXX DECIMALS± .005 [0.13]
ANGLES± 1°
FRACTIONS± 1/16
DO NOT SCALE THIS DRAWING
INTERPRET DRAWING PER ANSI Y14.5M

QC:

MAGTECH

TITLE: DRAWING, Tc POINT QM40 & QM50

APPROVAL DATE: 07/13/2020
EFFECTIVE DATE: 07/13/2020
MODEL NO. QM40 & QM50
DWG NO. P07-0225
REV. A0
SH 1 OF 1

070225A.DWG

FORM PF-0004